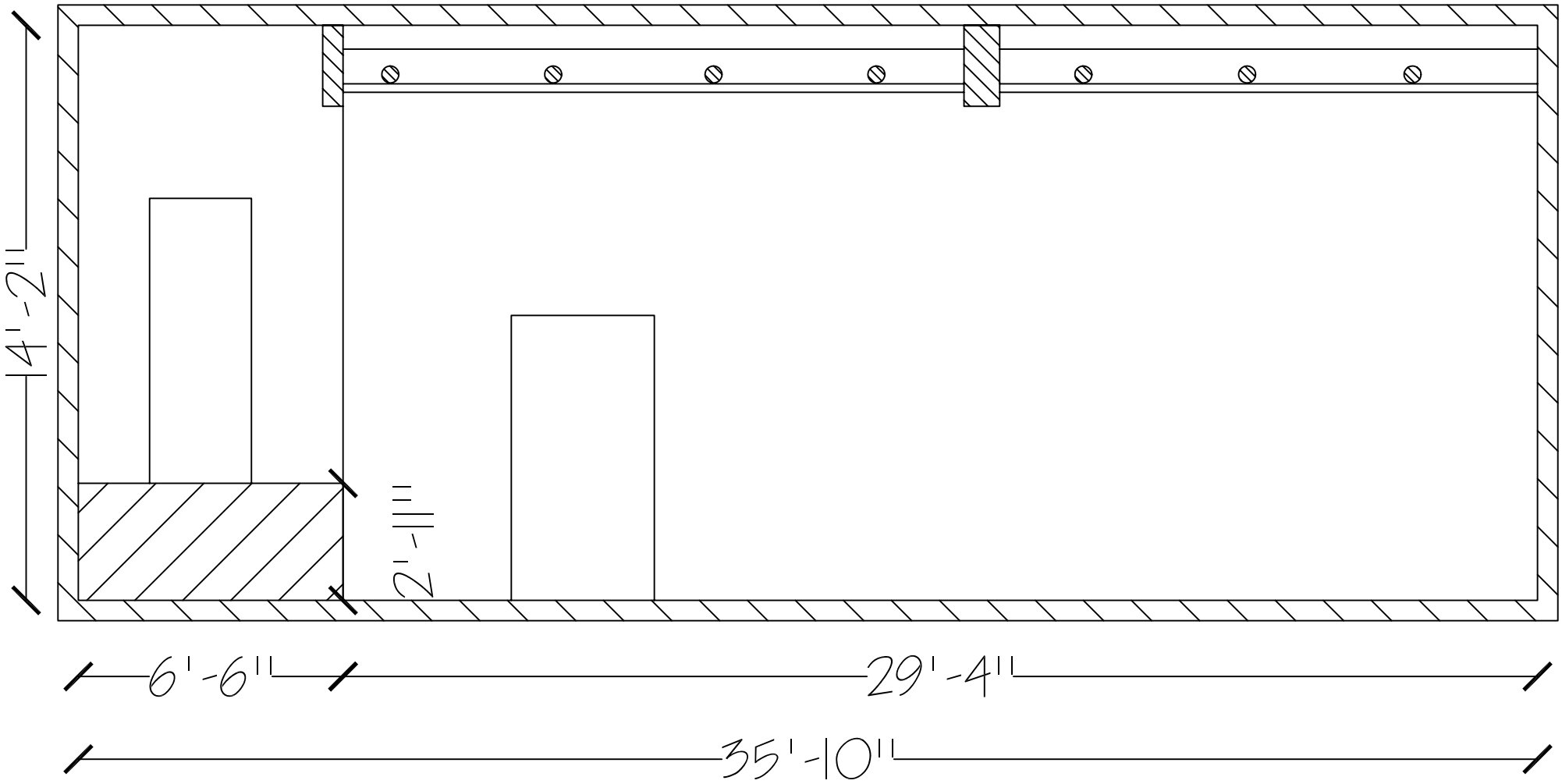Massman Theatre
U.S.C.
Not to Scale